DIMENSIONS RANGE	TOLERANGE UNLESS SPECIFIED
0.5≤X<1	±0.1
1≤X≤6	±0.15
6<X≤18	±0.2
18<X≤50	±0.3

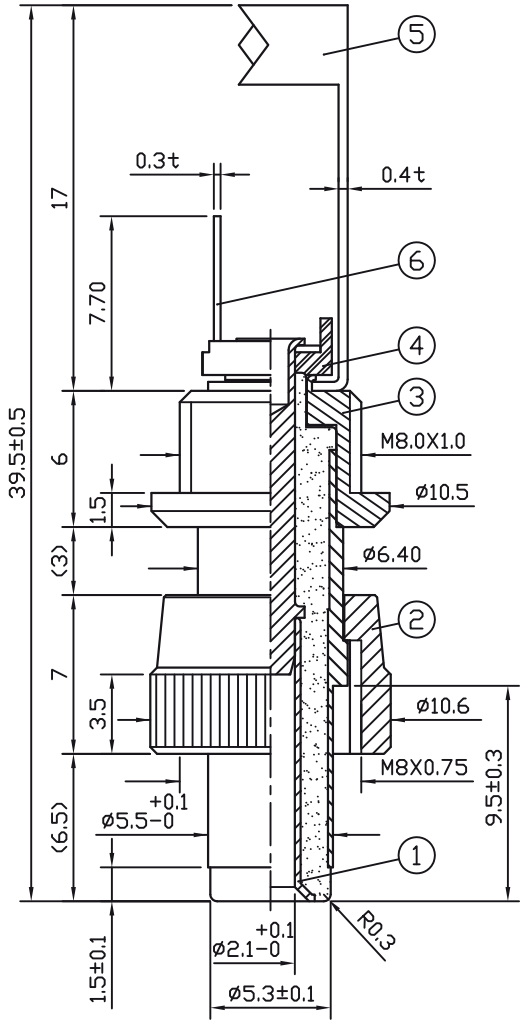

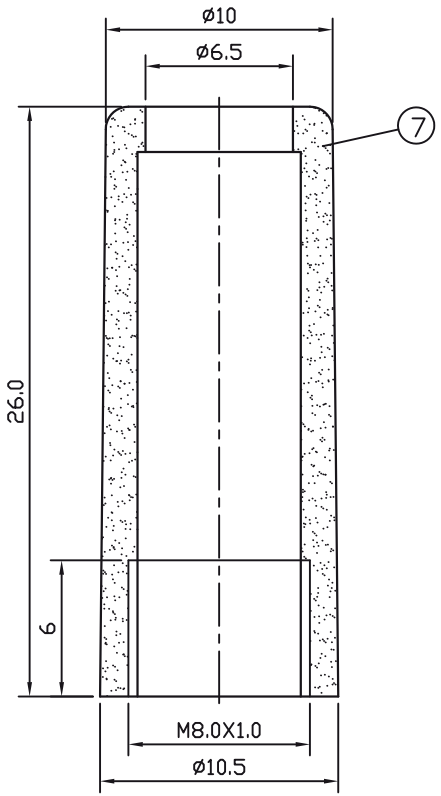

Follow RoHs Standard

1. Dielectric strength:AC 500V/1 minute.
2. Insuration resistance:100MΩ Min.(at 500V DC)
3. Contact resistance:30mΩMax.
4. Rating: 18V,2A.

DELOCK® we move the world

Date	2019 / 12 / 09	Title: Connector DC 5.5 x 2.1 mm with 9.5 mm length male	
Unit	mm	Item no.	89913
Projection		Barcode	4043619899135
Rev	A	File No.	88276