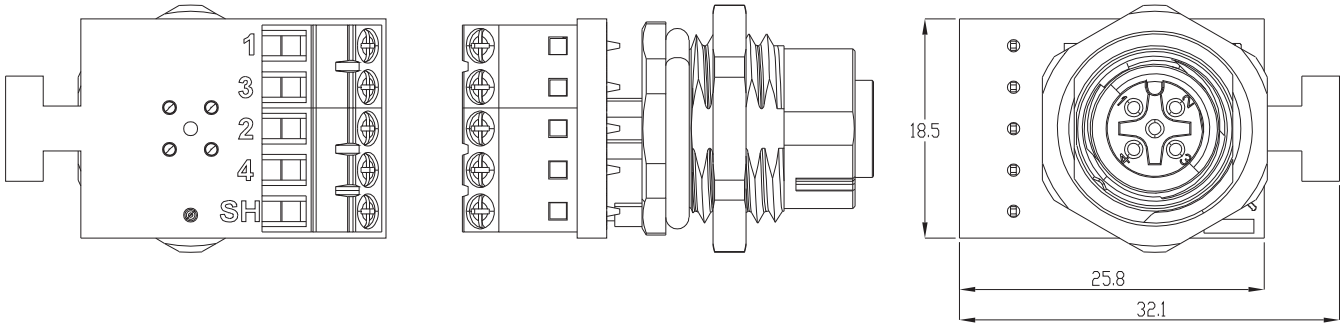

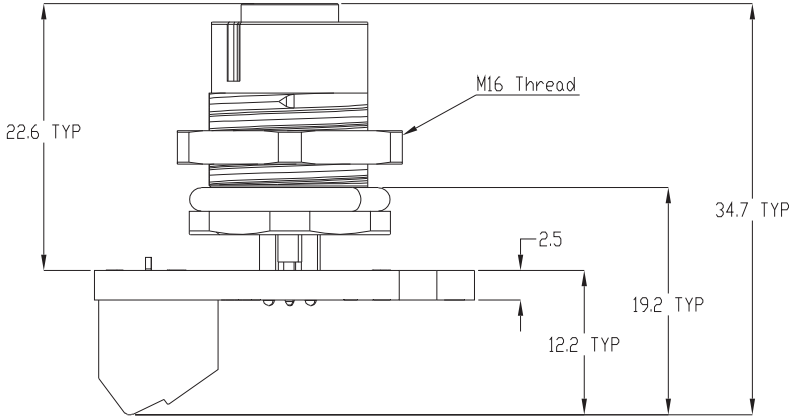

Connector Pinout

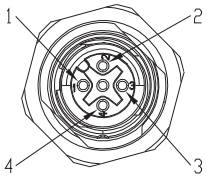

Recommended Panel Cutout

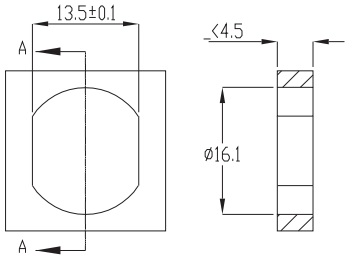

DELOCK®
we move the world

Dat	2024 / 05 / 29	Title: M12 Transfer Module Adapter 4 pin A-coded female to 5 pin terminal block	
Unit	mm	Item no.	60662
Projection		Barcode	4043619606627
Rev	A	File No.	88332